Meezan Khoja · Mechanical Engineer · Montreal, QC
438 764 7282 · meezan.khoja4@gmail.com · https://www.linkedin.com/in/meezankhoja · https://github.com/MeezanKhoja/Portfolio

CAPSTONE PROJECT
Friction Stir Welding (FSW) Machine Design, Analysis & Physical Build

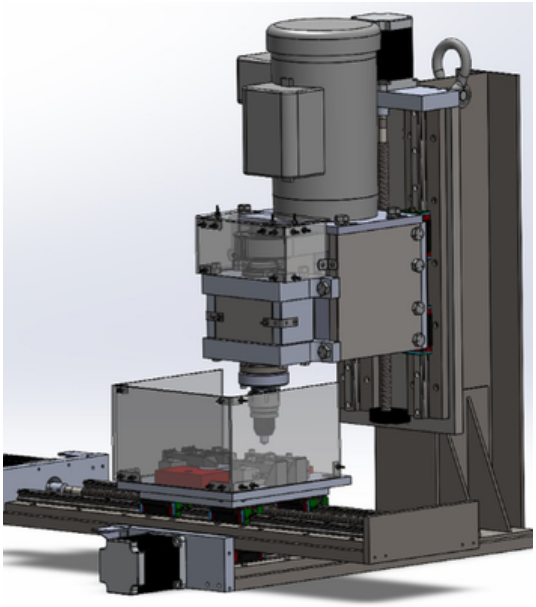

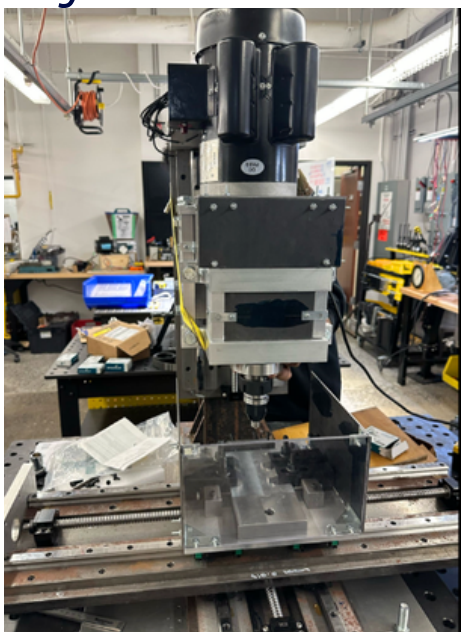

Left: SolidWorks assembly model · Right: Physical machine assembled at Concordia University

THE CHALLENGE	WHAT WAS DELIVERED
Convert an existing 3-axis table-top milling frame into a functional Friction Stir Welding (FSW) machine capable of joining aluminum plates — the same process used by Bombardier and Airbus for structural aerospace components.	✦ Spindle shaft designed & CNC-manufactured to sustain 2500 N Axial, 1500 N radial and 500 N tangential loads ✦ 3-axis CNC motion control system wired & bench-tested ✦ CAM toolpaths programmed; fixture plate machined ✦ Successful FSW aluminum plate joining ✦ Thermal validation via FLIR imaging to verify heat generation

KEY RESULTS		
$250 Cost Saved or **12%** of budget reduced using DFM Methods	Spindle Shaft **SF > 7** Achieved; ANSYS Validated	CNC Calibrated to **±0.1 mm** Motion Accuracy

My Role: Shaft design & analysis · CNC control system design & wiring · CAM programming · Fixture plate manufacturing · BOM & sourcing

Team Size: 6 members · Concordia University · Sept 2024 – May 2025

SHAFT DESIGN & STRUCTURAL ANALYSIS

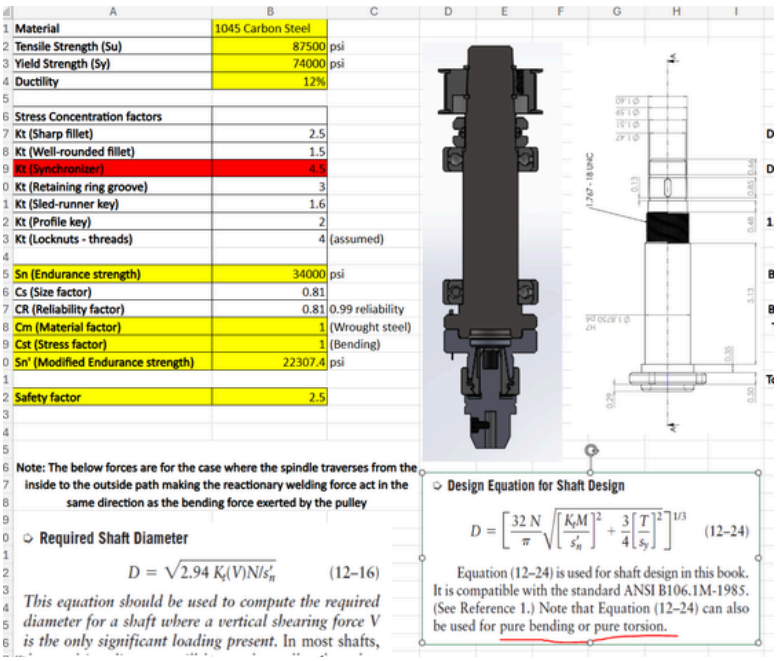

Material	1045 Carbon Steel	
Tensile Strength (Su)	87500	psi
Yield Strength (Sy)	74000	psi
Ductility	12%	
Stress Concentration factors		
Kt (Sharp fillet)	2.5	
Kt (Well-rounded fillet)	1.5	
Kt (Synchronizer)	4.5	
Kt (Retaining ring groove)	3	
Kt (Sled-runner key)	1.6	
Kt (Profile key)	2	
Kt (Locknuts - threads)	4	(assumed)
Sn (Endurance strength)	34000	psi
Cs (Size factor)	0.81	
CR (Reliability factor)	0.81	0.99 reliability
Cm (Material factor)	1	(Wrought steel)
Cst (Stress factor)	1	(Bending)
Sn' (Modified Endurance strength)	22307.4	psi
Safety factor	2.5	

Note: The below forces are for the case where the spindle traverses from the inside to the outside path making the reactionary welding force act in the same direction as the bending force exerted by the pulley

Required Shaft Diameter

$$D = \sqrt{2.94\, K_t(V)N/s'_n} \qquad (12\text{–}16)$$

This equation should be used to compute the required diameter for a shaft where a vertical shearing force V is the only significant loading present. In most shafts,

Design Equation for Shaft Design

$$D = \left[\frac{32\,N}{\pi}\sqrt{\left[\frac{K_t M}{s'_n}\right]^2 + \frac{3}{4}\left[\frac{T}{s_y}\right]^2}\right]^{1/3} \qquad (12\text{–}24)$$

Equation (12–24) is used for shaft design in this book. It is compatible with the standard ANSI B106.1M-1985. (See Reference 1.) Note that Equation (12–24) can also be used for pure bending or pure torsion.

Iterative Excel calculator: forces → torque/bending diagrams → minimum shaft diameter. Material: 1045 Carbon Steel. Input loads derived from empirical FSW force models.

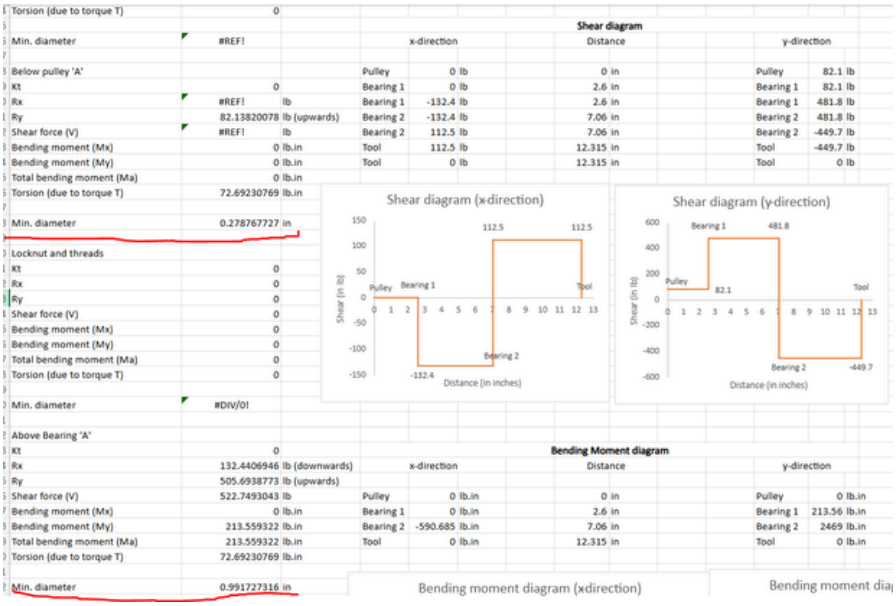

Torsion (due to torque T)	0							
				Shear diagram				
Min. diameter	#REF!		x-direction		Distance		y-direction	
Below pulley 'A'			Pulley	0	lb	0 in	Pulley	82.1 lb
Kt	0		Bearing 1	0	lb	2.6 in	Bearing 1	82.1 lb
Rx	#REF!	lb	Bearing 1	-132.4	lb	2.6 in	Bearing 1	481.8 lb
Ry	82.13820078	lb (upwards)	Bearing 2	-132.4	lb	7.06 in	Bearing 2	481.8 lb
Shear force (V)	#REF!	lb	Bearing 2	112.5	lb	7.06 in	Bearing 2	-449.7 lb
Bending moment (Mx)	0	lb.in	Tool	112.5	lb	12.315 in	Tool	-449.7 lb
Bending moment (My)	0	lb.in	Tool	0	lb	12.315 in	Tool	0 lb
Total bending moment (Ma)	0	lb.in						
Torsion (due to torque T)	72.69230769	lb.in						
Min. diameter	0.278767727	in						
Locknut and threads								
Kt	0							
Rx	0							
Ry	0							
Shear force (V)	0							
Bending moment (Mx)	0							
Bending moment (My)	0							
Total bending moment (Ma)	0							
Torsion (due to torque T)	0							
Min. diameter	#DIV/0!							
Above Bearing 'A'								
Kt	0			Bending Moment diagram				
Rx	132.4406946	lb (downwards)	x-direction		Distance		y-direction	
Ry	505.6938773	lb (upwards)						
Shear force (V)	522.7493043	lb	Pulley	0	lb.in	0 in	Pulley	0 lb.in
Bending moment (Mx)	0	lb.in	Bearing 1	0	lb.in	2.6 in	Bearing 1	213.56 lb.in
Bending moment (My)	213.559322	lb.in	Bearing 2	-590.685	lb.in	7.06 in	Bearing 2	2469 lb.in
Total bending moment (Ma)	213.559322	lb.in	Tool	0	lb.in	12.315 in	Tool	0 lb.in
Torsion (due to torque T)	72.69230769	lb.in						
Min. diameter	0.991727316	in						

Bending moment diagram (x-direction) at maximum FSW operating load. Critical section identified at Bearing 2 — governed shaft diameter selection.

Final shaft: 1045 carbon steel, CNC-machined from analytical specifications.
Key, bearing seats, and thread features within tolerance.

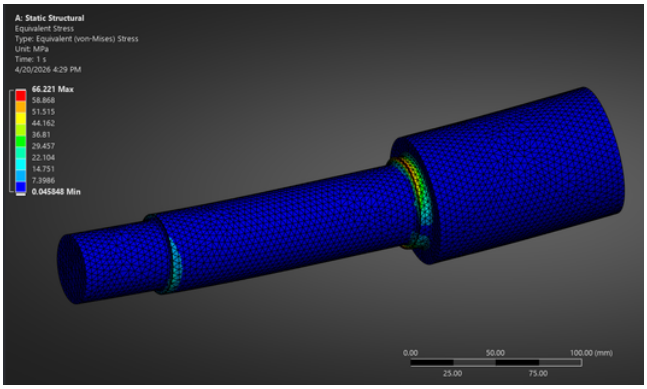

Von Mises stress distribution due to FSW operating loads applied at tool end. Maximum stress: 67 MPa at Bearing/step-diameter section. Safety Factor of ~7.9 = 530 MPa / 67 MPa (1045 carbon steel)

ANSYS Validation of Safety under loading conditions

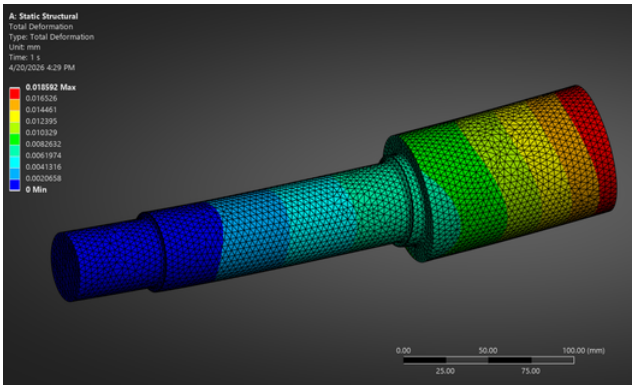

Maximum Shaft Deformation of 0.018 mm near tool end section indicating great shaft stiffness under loading conditions

PHYSICAL BUILD & TEST VALIDATION
From CAD to Working Machine

Successful FSW weld bead on 2024-T3 aluminum alloy plates. Tool: H13 steel, custom geometry. Parameters (RPM, feed rate) derived analytically. Result confirmed proof-of-concept and validated force/thermal models.

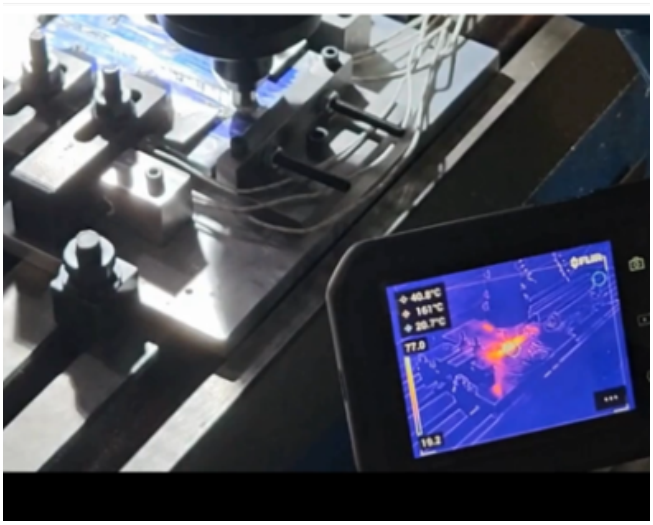

FLIR thermal image during welding — heat zone at tool-workpiece interface. Target temperature range achieved at calculated RPM, confirming thermal model accuracy.

Assembled FSW machine at Concordia University machine shop. Spindle assembly, guide rails, and clamping system integrated on inherited 3-axis frame.

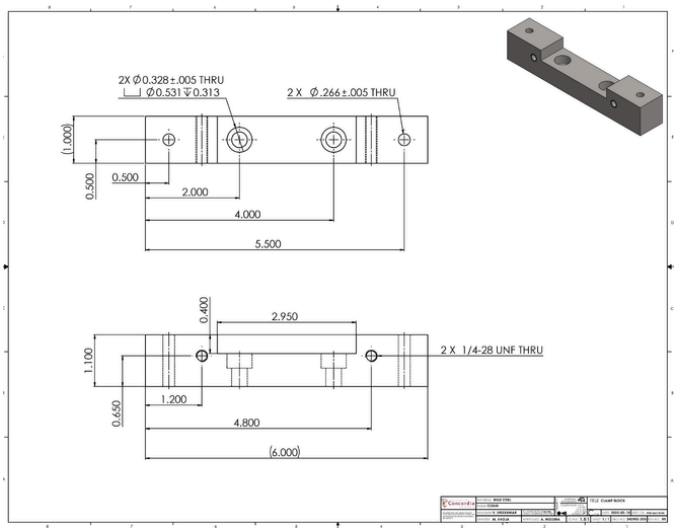

Engineering Drawings created in SOLIDWORKS for manufacturing the parts of the Clamping System on a manual mill. Use of GD&T and step-by-step manufacturing sheet.

RESULTS		
Thermal Validation FLIR imaging confirmed target heat zone reached	Weld Confirmed Aluminum plates joined by FSW Experiment	CNC Calibrated ±0.1 mm accuracy by MACH3 calibration

CNC CONTROL SYSTEM & MANUFACTURING

Electrical Design · Motion Control · G-Code · BOM

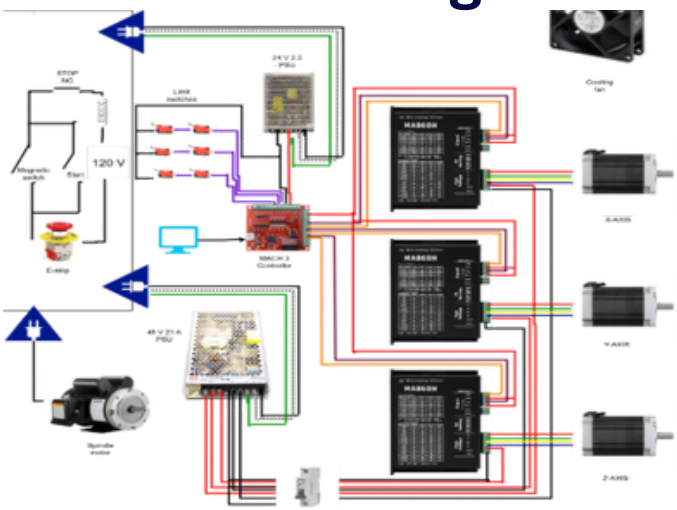

Complete wiring schematic: 3× NEMA 34 stepper motors (12.5 N·m), MA860H drivers, MACH3 motion controller, 48V/1000W PSU, limit switches, and E-Stop. Designed without prior electrical engineering coursework.

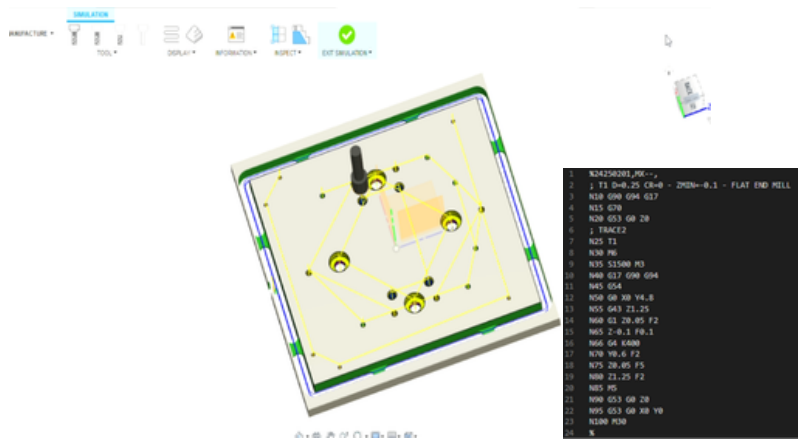

CAM simulation for fixture plate: contour milling, drilling, boring operations.
Toolpath verified in simulation before CNC execution.

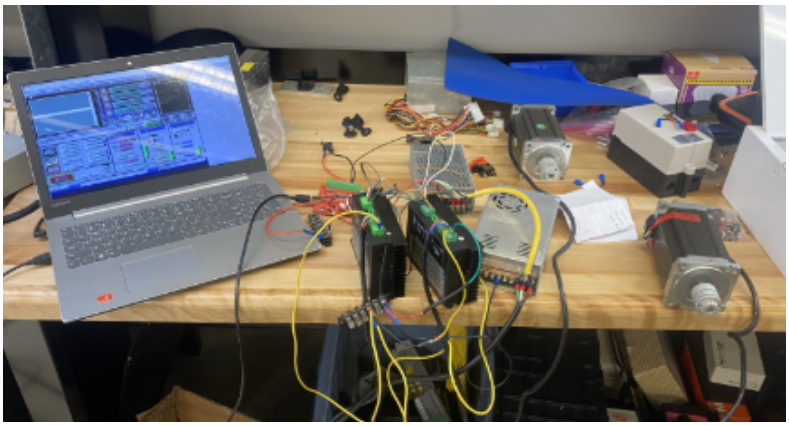

G-code loaded and executing in MACH3 — straight-line weld path programmed at calculated RPM and feed rate. Axis motion verified via bench-test and limit switch testing.

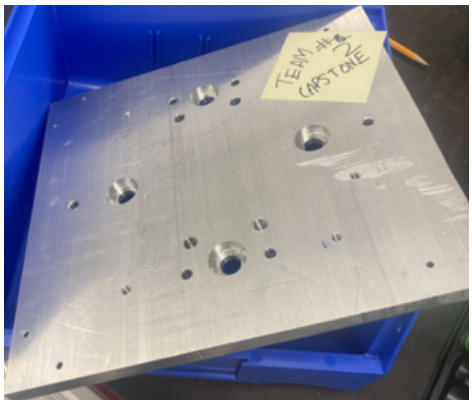

Manufactured result: fixture plate, 6061 aluminum, CNC-milled at Concordia. Part forms the base of the workpiece clamping assembly.

BOM - CNC Subsystem		
Component	QTY	Specification
NEMA 34 Stepper Motor	3	12.5 N·m, 1.8° phase
MA860H Stepper Driver	3	24–110V, 6A max
MACH3 Motion Controller	1	4-axis breakout board
48V 21A PSU	1	1000W, spindle + motors
Limit Switches	6	NC Type

Full Engineering Report at: https://github.com/MeezanKhoja/Portfolio